UDL-16 TX-2400 MHz 9D 2
UDL-16 OCXO-REF 9D 3
UDL-16 RECEIVER 9D 4
UDL-16 CPU 9D 5
UDL-16 Circuit-Connect 9D 6
UDL-16 UD-16 PCB 9D 7
UDL-16 DC/DC-PCB 4D 8
UDL-16 PA-2400 5D 9
UDL-16 RX-DISPLAY 5D 10
UDL-16 TX-DISPLAY 5D 11

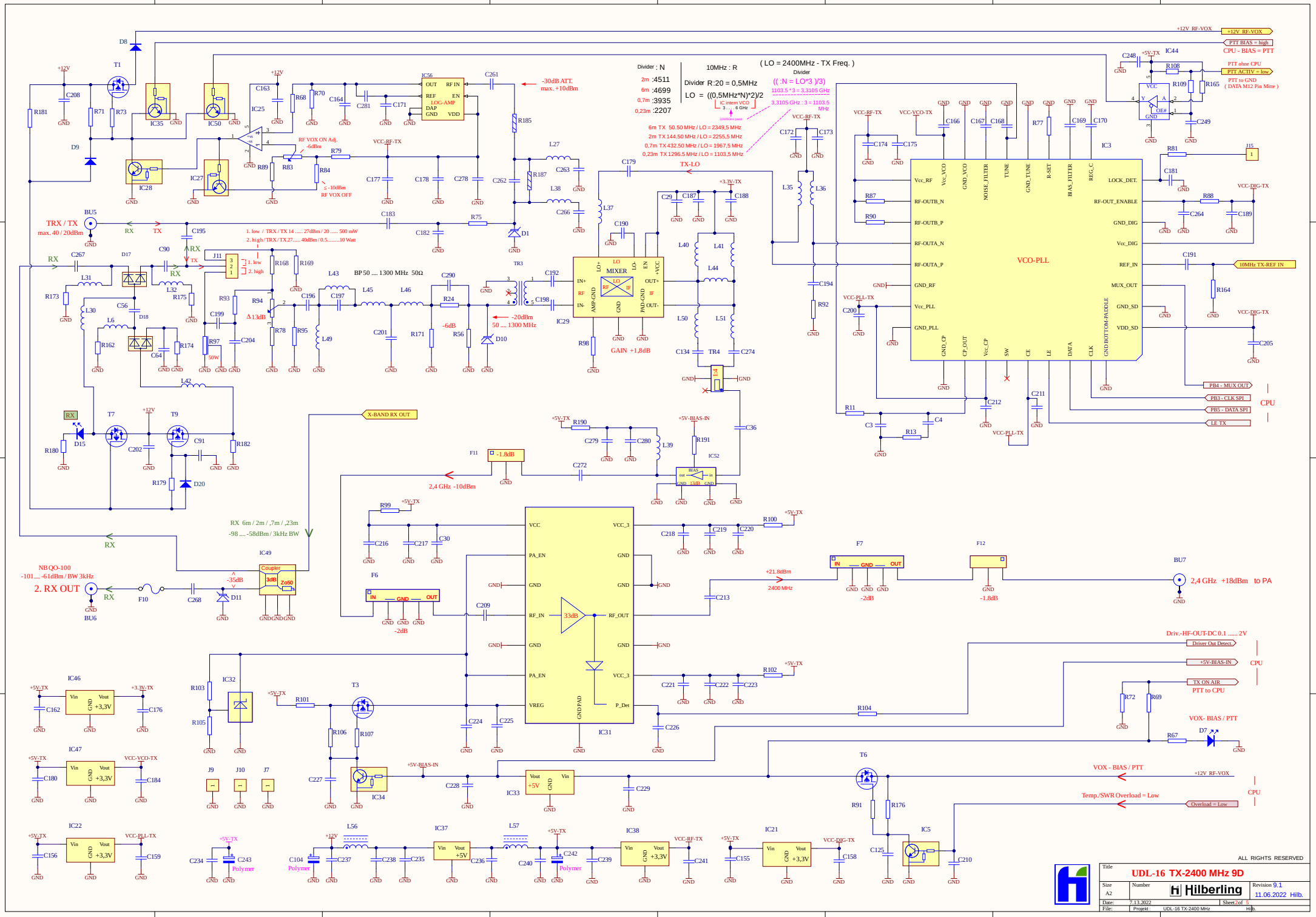
UDL-16 TX-2400 MHz 9D
Hilberling
Revision 9.1
11.06.2022 Hilb.
Date: 7.13.2022
Sheet 2 of 5
File:
Projekt : UDL-16 TX-2400 MHz
ALL RIGHTS RESERVED
(LO = 2400MHz - TX Freq.)
Divider : N
2m :4511
6m :4699
0,7m :3935
0,23m :2207
10MHz : R
Divider R:20 = 0,5MHz
LO = ((0,5MHz*N)*2)/2
((:N = LO*3)/3)
1103.5 * 3 = 3,3105 GHz
3,3105 GHz : 3 = 1103.5 MHz
6m TX 50.50 MHz / LO = 2349,5 MHz
2m TX 144.50 MHz / LO = 2255,5 MHz
0,7m TX 432.50 MHz / LO = 1967,5 MHz
0,23m TX 1296.5 MHz / LO = 1103,5 MHz
TRX / TX
max. 40 / 20dBm
BP 50 .... 1300 MHz 50Ω
1. low / TRX / TX 14 ..... 27dBm / 20 ..... 500 mW
2. high / TRX / TX 27..... 40dBm / 0.5.....10 Watt
-30dB ATT.
max. +10dBm
RF VOX ON Adj. -6dBm
RF VOX OFF
-20dBm
50 .... 1300 MHz
GAIN +1,8dB
TX-LO
MIXER
VCO-PLL
10MHz TX-REF IN
CPU - BIAS = PTT
PTT ohne CPU
PTT AC.TIV = low
PTT to GND
(DATA M12 Pin Mitte)
PB4 - MUX OUT
PB3 - CLK SPI
PB5 - DATA SPI
LE TX
CPU
X-BAND RX OUT
RX 6m / 2m / ,7m / ,23m
-98 .... -58dBm / 3kHz BW
NB QO-100
-101.... -61dBm / BW 3kHz
2. RX OUT
2,4 GHz -10dBm
2,4 GHz +18dBm to PA
+21.8dBm
2400 MHz
Driv.-HF-OUT-DC 0.1 ..... 2V
Driver Out Detect.
+5V-BIAS-IN
TX ON AIR
PTT to CPU
VOX- BIAS / PTT
VOX - BIAS / PTT
Temp./SWR Overload = Low
Overload = Low
+12V RF-VOX
PTT BIAS = high
Polymer

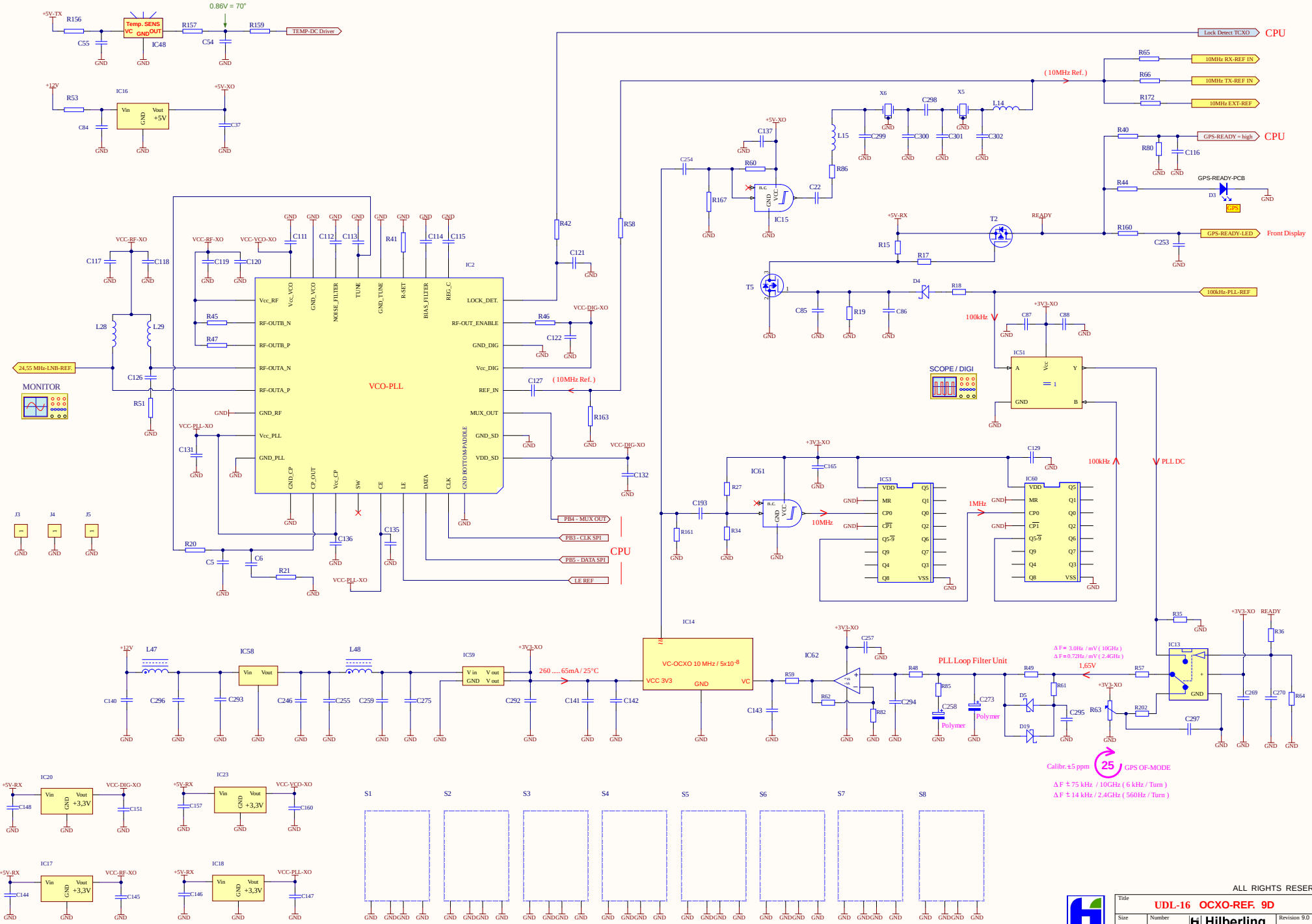
VCO-PLL
IC2
Vcc_RF
Vcc_VCO
GND_VCO
NOISE_FILTER
TUNE
GND_TUNE
R-SET
BIAS_FILTER
REG_C
LOCK_DET.
RF-OUTB_N
RF-OUTB_P
RF-OUTA_N
RF-OUTA_P
RF-OUT_ENABLE
GND_DIG
Vcc_DIG
REF_IN
MUX_OUT
GND_RF
Vcc_PLL
GND_PLL
GND_SD
VDD_SD
GND_CP
CP_OUT
Vcc_CP
SW
CE
LE
DATA
CLK
GND BOTTOM PADDLE
24,55 MHz-LNB-REF.
MONITOR
SCOPE / DIGI
TEMP-DC Driver
Lock Detect TCXO
CPU
10MHz RX-REF IN
10MHz TX-REF IN
10MHz EXT-REF
GPS-READY = high
GPS-READY-PCB
GPS-READY-LED
Front Display
100kHz-PLL-REF
PB4 - MUX OUT
PB3 - CLK SPI
PB5 - DATA SPI
LE REF
(10MHz Ref.)
100kHz
PLL DC
10MHz
1MHz
IC61
IC53
IC60
IC51
IC15
IC16
IC20
IC23
IC17
IC18
IC58
IC59
IC14
IC62
IC13
VC-OCXO 10 MHz / 5x10-8
VCC 3V3
260 ..... 65mA / 25°C
PLL Loop Filter Unit
Polymer
1,65V
Δ F = 3.0Hz /mV (10GHz)
Δ F = 0.72Hz /mV (2.4GHz)
Calibr. ±5 ppm
25
GPS OF-MODE
Δ F ± 75 kHz / 10GHz (6 kHz / Turn)
Δ F ± 14 kHz / 2.4GHz (560Hz / Turn)
S1
S2
S3
S4
S5
S6
S7
S8
ALL RIGHTS RESERVED
Title
UDL-16 OCXO-REF. 9D
Size
A2
Number
Hilberling
Revision 9.0
05.04.2022 Hilb.
Date: 7.12.2022
Sheet 5 of 5
File:
Projekt : UDL-16 OCXO
Hilb.

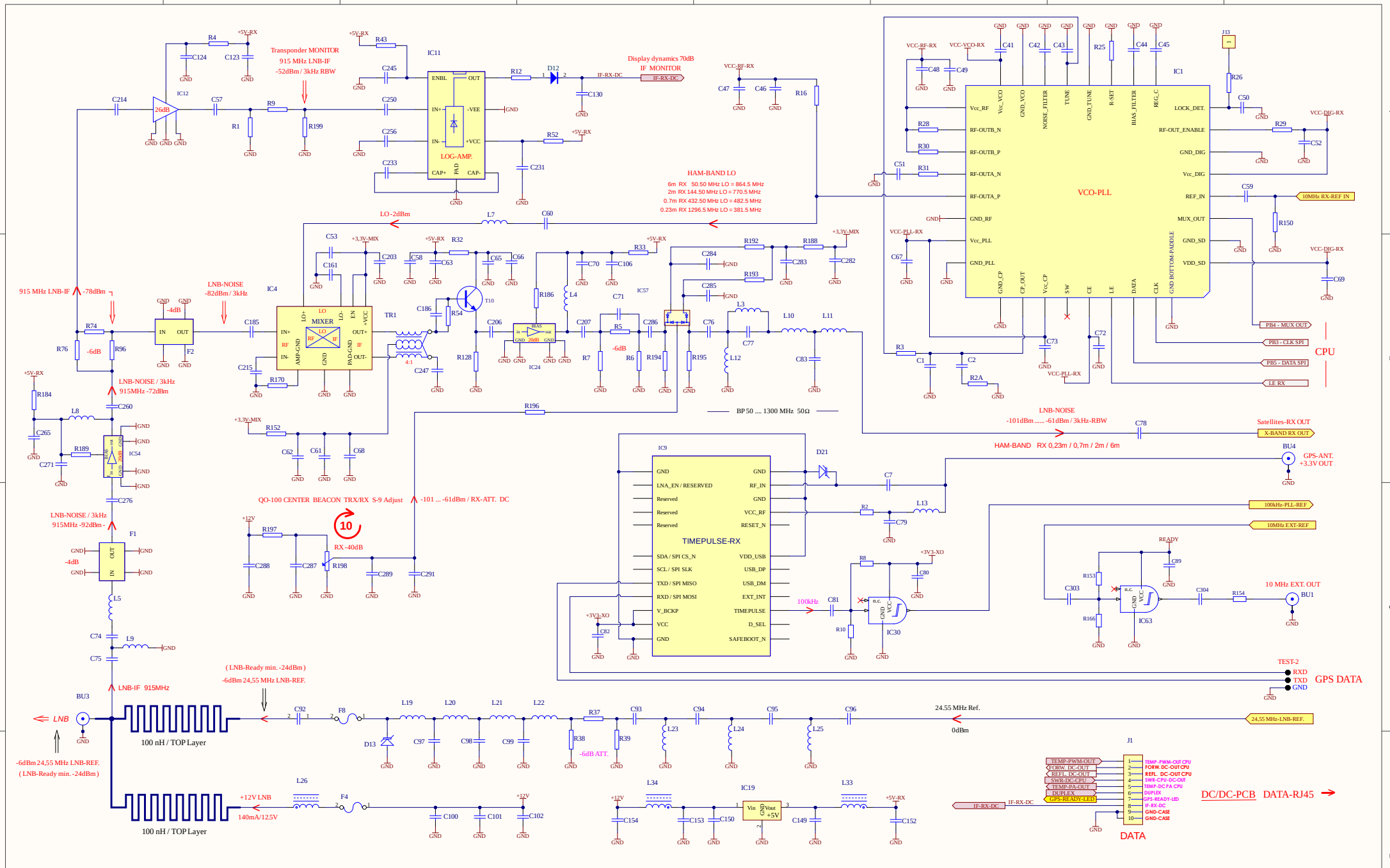
Transponder MONITOR
915 MHz LNB-IF
-52dBm / 3kHz RBW
Display dynamics 70dB
IF MONITOR
IF-RX-DC
LOG-AMP.
HAM-BAND LO
6m RX 50.50 MHz LO = 864.5 MHz
2m RX 144.50 MHz LO = 770.5 MHz
0.7m RX 432.50 MHz LO = 482.5 MHz
0.23m RX 1296.5 MHz LO = 381.5 MHz
LO -2dBm
VCO-PLL
10MHz RX-REF IN
CPU
PB4 - MUX OUT
PB3 - CLK SPI
PB5 - DATA SPI
LE RX
915 MHz LNB-IF -78dBm
LNB-NOISE
-82dBm / 3kHz
MIXER
LNB-NOISE / 3kHz
915MHz -72dBm
BP 50 .... 1300 MHz 50Ω
LNB-NOISE
-101dBm ..... -61dBm / 3kHz-RBW
HAM-BAND RX 0,23m / 0,7m / 2m / 6m
Satellites-RX OUT
X-BAND RX OUT
GPS-ANT.
+3.3V OUT
TIMEPULSE-RX
100kHz-PLL-REF
10MHz EXT-REF
10 MHz EXT. OUT
QO-100 CENTER BEACON TRX/RX S-9 Adjust
-101 ... -61dBm / RX-ATT. DC
RX -40dB
LNB-NOISE / 3kHz
915MHz -92dBm
LNB-IF 915MHz
(LNB-Ready min. -24dBm)
-6dBm 24,55 MHz LNB-REF.
100 nH / TOP Layer
24.55 MHz Ref.
0dBm
24,55 MHz-LNB-REF.
GPS DATA
TEST-2
RXD
TXD
GND
LNB
-6dBm 24,55 MHz LNB-REF.
(LNB-Ready min. -24dBm)
+12V LNB
140mA/12.5V
DC/DC-PCB DATA-RJ45
DATA
IC36
IC10
IC7
IC8
IC55
+3,3V
ALL RIGHTS RESERVED
UDL-16 RECEIVER 9D
Hilberling
Revision 9.3
03.08.2022 Hilb.
Date: 8.03.2022
Sheet 3 of 5
File: Projekt : UDL-16 RECEIVER Hilb.

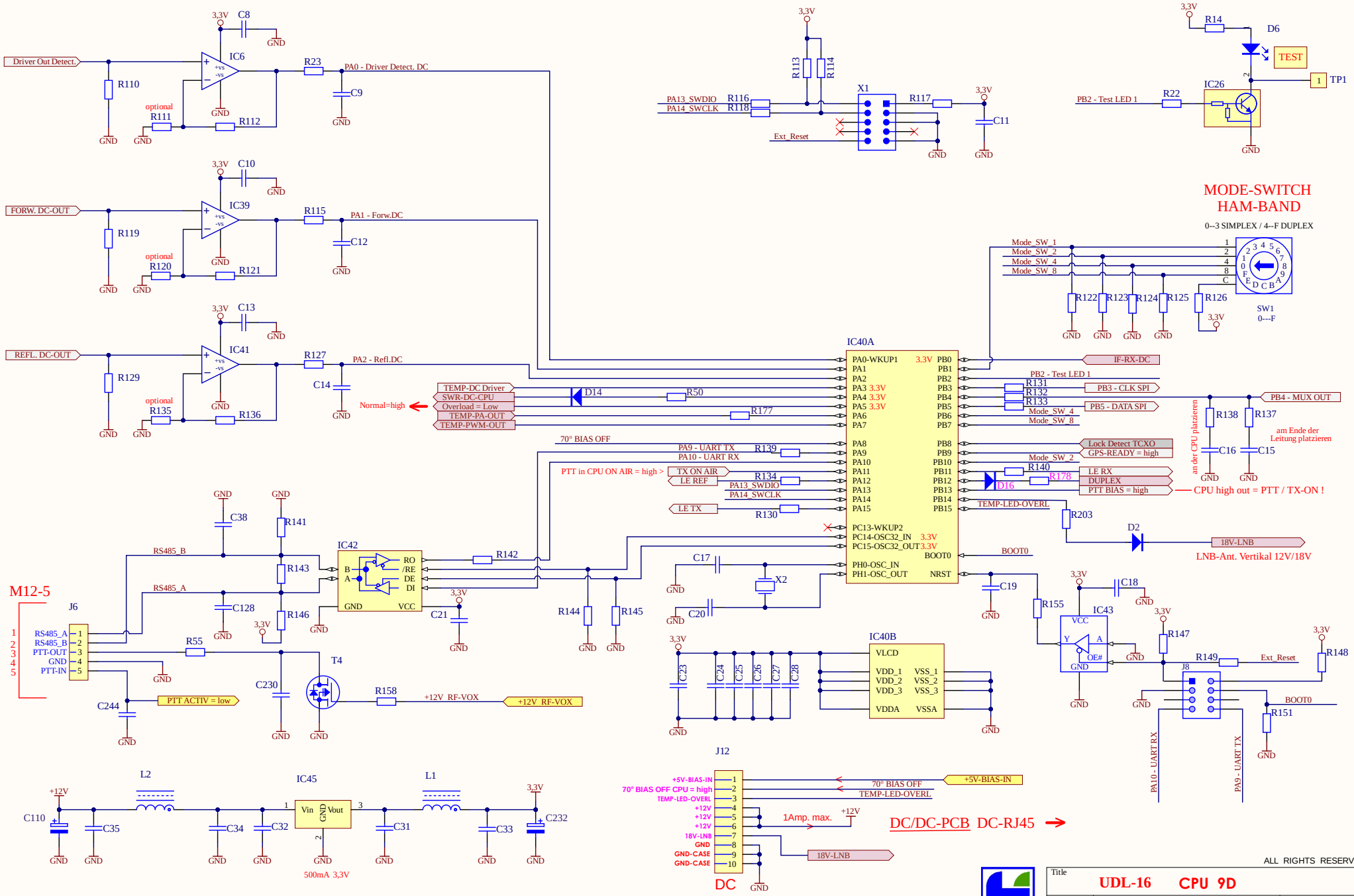
MODE-SWITCH
HAM-BAND
0--3 SIMPLEX / 4--F DUPLEX
SW1
0---F
IC40A
IC40B
IC42
IC43
IC45
IC6
IC39
IC41
IC26
X1
X2
J6
J8
J12
M12-5
DC
DC/DC-PCB DC-RJ45
TEST
TP1
D6
D2
D14
D16
T4
L1
L2
Driver Out Detect.
FORW. DC-OUT
REFL. DC-OUT
PA0 - Driver Detect. DC
PA1 - Forw.DC
PA2 - Refl.DC
PA13_SWDIO
PA14_SWCLK
Ext_Reset
PB2 - Test LED 1
IF-RX-DC
PB3 - CLK SPI
PB4 - MUX OUT
PB5 - DATA SPI
Mode_SW_1
Mode_SW_2
Mode_SW_4
Mode_SW_8
TEMP-DC Driver
SWR-DC-CPU
Overload = Low
TEMP-PA-OUT
TEMP-PWM-OUT
Normal=high
70° BIAS OFF
PA9 - UART TX
PA10 - UART RX
PTT in CPU ON AIR = high >
TX ON AIR
LE REF
LE TX
Lock Detect TCXO
GPS-READY = high
LE RX
DUPLEX
PTT BIAS = high
CPU high out = PTT / TX-ON !
TEMP-LED-OVERL
BOOT0
18V-LNB
LNB-Ant. Vertikal 12V/18V
am Ende der Leitung platzieren
an der CPU platzieren
RS485_B
RS485_A
PTT-OUT
PTT-IN
PTT ACTIV = low
+12V_RF-VOX
+5V-BIAS-IN
70° BIAS OFF CPU = high
GND-CASE
1Amp. max.
500mA 3,3V
ALL RIGHTS RESERVED
Title
UDL-16 CPU 9D
Size
A3
Number
Hilberling
Revision 9.0
05.04.2022 Hilb.
Date: 7.13.2022
Sheet 4 of 5
File:
Projekt : UDL-16 CPU
Hilb.

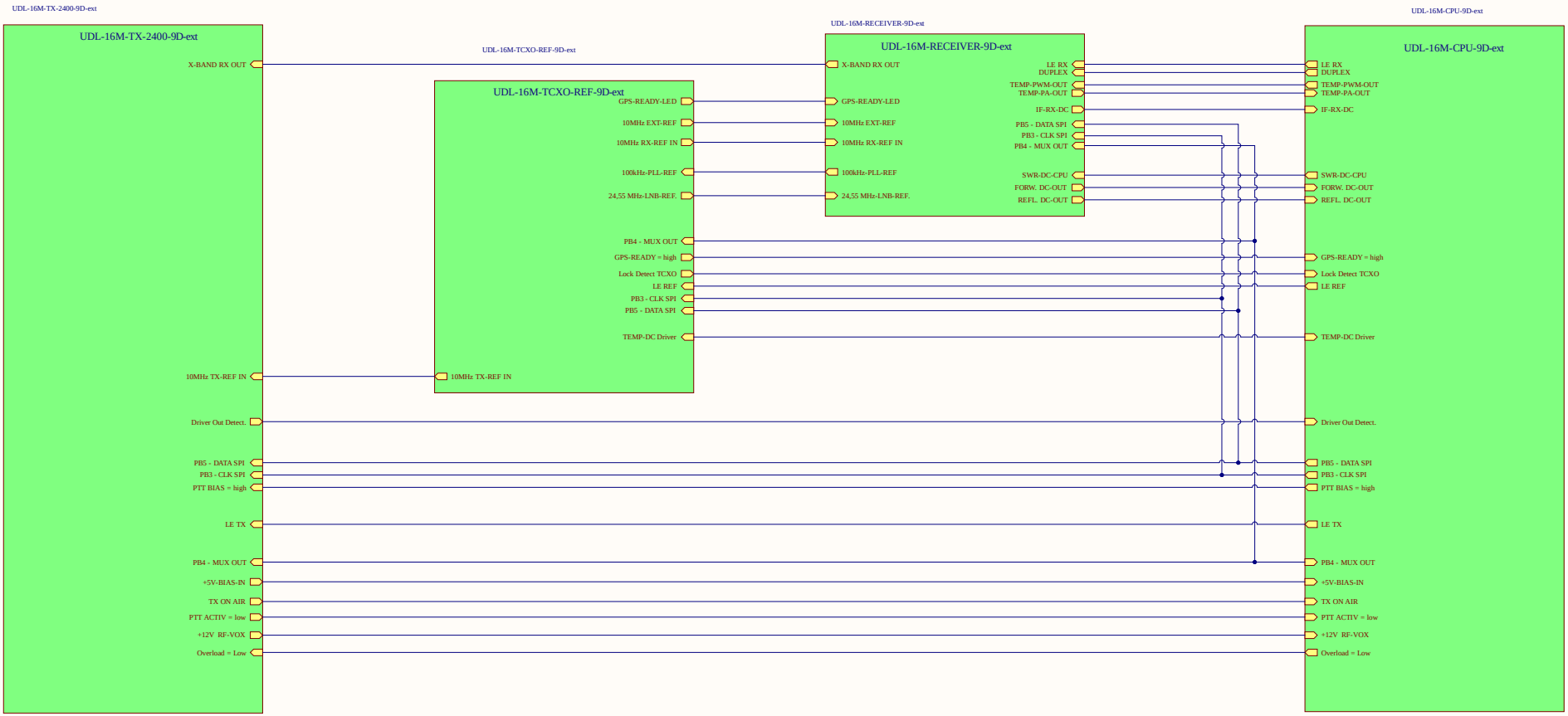

ALL RIGHTS RESERVED

Title	UDL-16 Circuit-Connect 9D		
Size A2	Number	Hilberling	Revision 9.0 05.04.2022 Hilb.
Date: 7.12.2022		Sheet 5 of 5	
File:	Projekt : UDL-16 Circuit-Connect		Hilb.

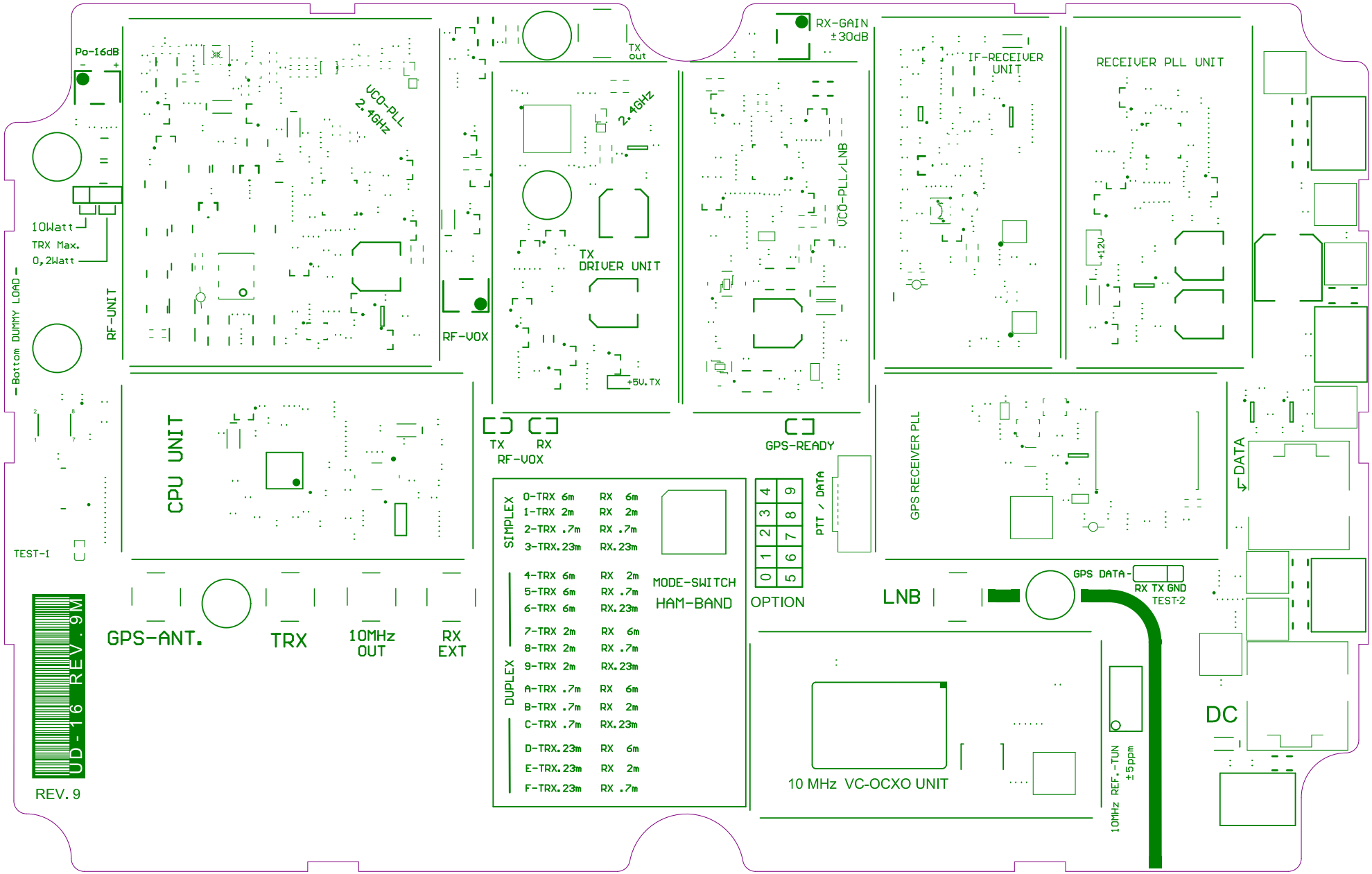

UDL-16 Multi-Transverter : UD-16 PCB / 4 x Simplex MODE / 12 x Duplex MODE

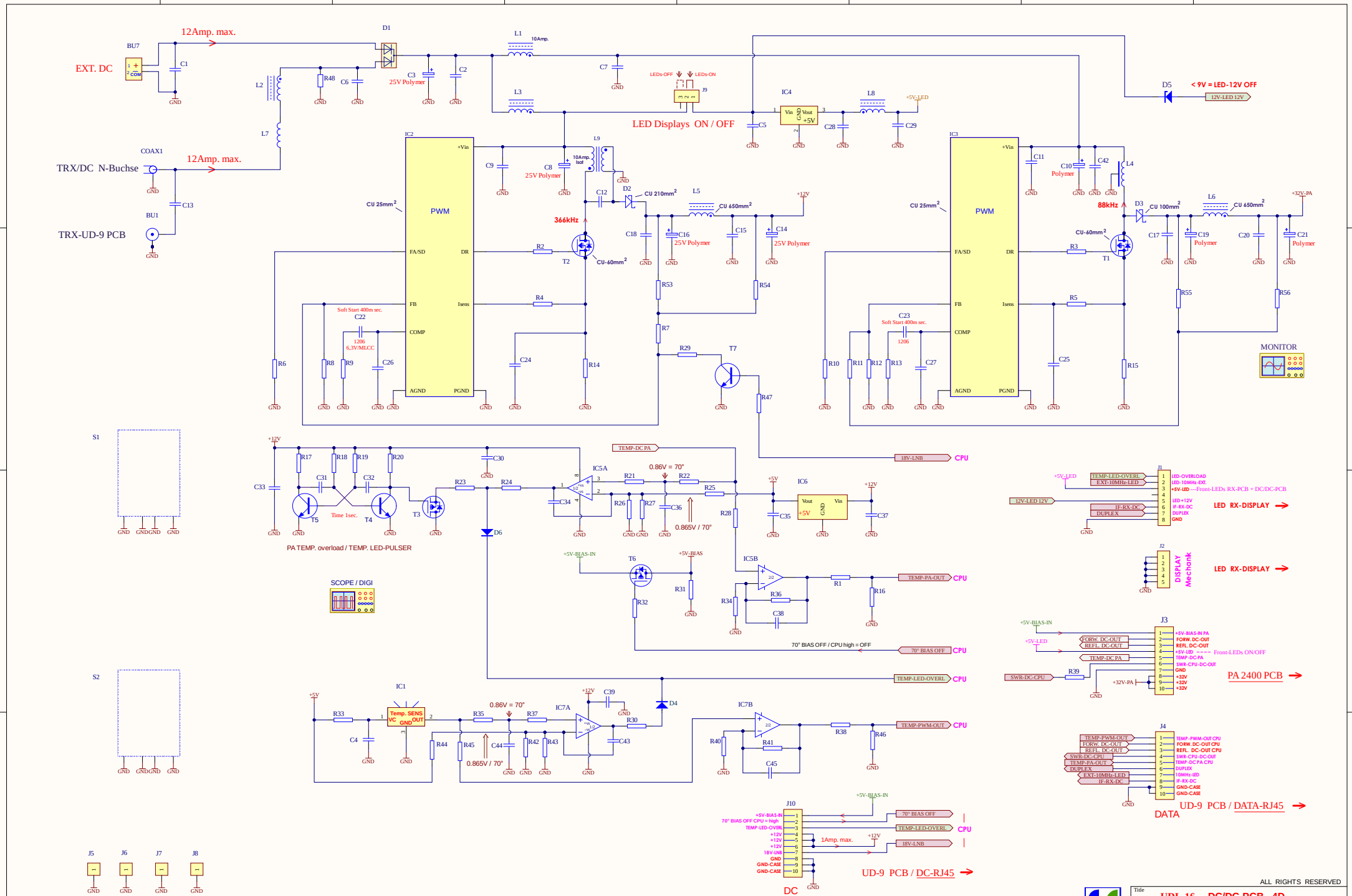

ALL RIGHTS RESERVED

Title	UDL-16 DC/DC-PCB 4D		
Size A2	Number	Hilberling	Revision 3.0 30.11.2020 Hilb.
Date: 7.12.2022		Sheet 1 of 1	
File:	Projekt UDL-16 DC/DC PCB		Hilb.

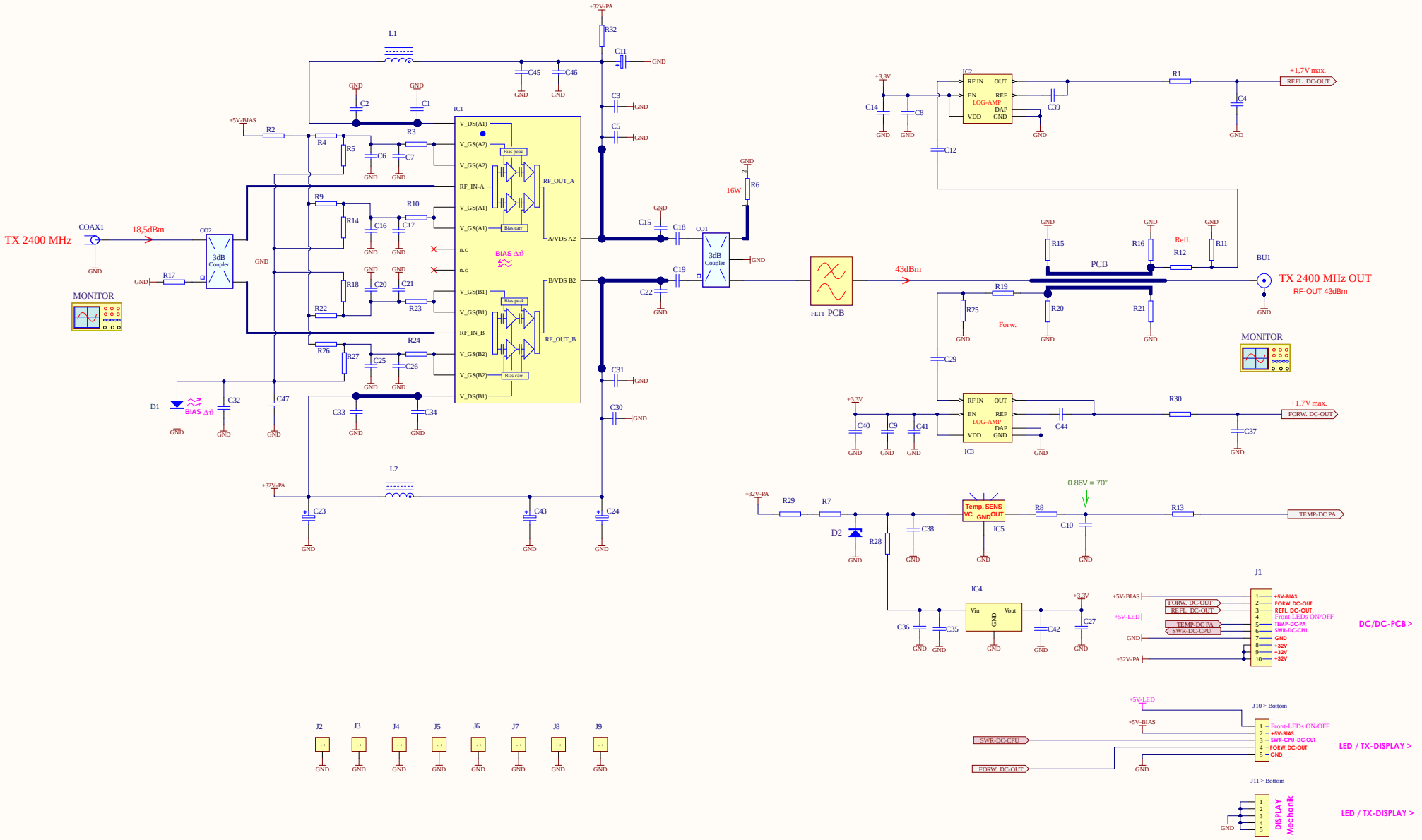

ALL RIGHTS RESERVED

Title	UDL-16 PA-2400 5D	
Size A2	Number	Revision 5.0
	Hilberling	27-05-2021 Hilb.
Date: 7.12.2022		Sheet of 1 1
File: Projekt UDL-16 PA-2400		Hilb.

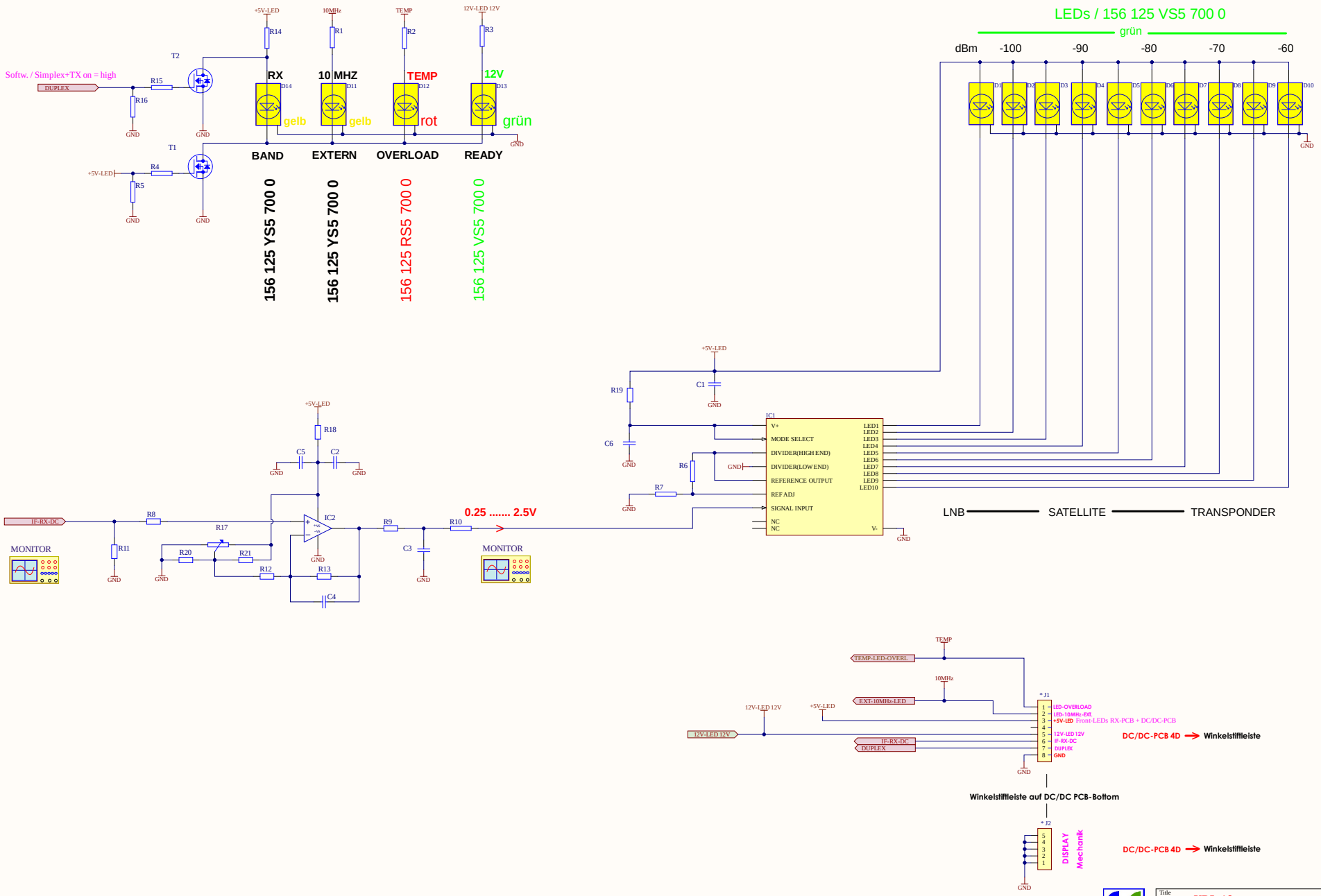
LEDs / 156 125 VS5 700 0
grün
dBm -100 -90 -80 -70 -60
Softw. / Simplex+TX on = high
DUPLEX
RX
10 MHZ
TEMP
12V
gelb
gelb
rot
grün
BAND
EXTERN
OVERLOAD
READY
156 125 YS5 700 0
156 125 YS5 700 0
156 125 RS5 700 0
156 125 VS5 700 0
IF-RX-DC
MONITOR
0.25 ..... 2.5V
MONITOR
IC1
IC2
LNB
SATELLITE
TRANSPONDER
TEMP-LED-OVERL
EXT-10MHz-LED
12V-LED 12V
IF-RX-DC
DUPLEX
LED-OVERLOAD
LED-10MHz-EXT.
+5V-LED Front-LEDs RX-PCB + DC/DC-PCB
12V-LED 12V
IF-RX-DC
DUPLEX
GND
DC/DC-PCB 4D → Winkelstiftleiste
Winkelstiftleiste auf DC/DC PCB-Bottom
DISPLAY Mechanik
DC/DC-PCB 4D → Winkelstiftleiste
Title
UDL-16 RX-DISPLAY 5D
Size A2
Number
Hilberling
Revision 5.0
06.01.2022 Hilb.
Date: 7.12.2022
Sheet 1 of 1
File: Projekt UDL-16 RX-DISPLAY Hilb

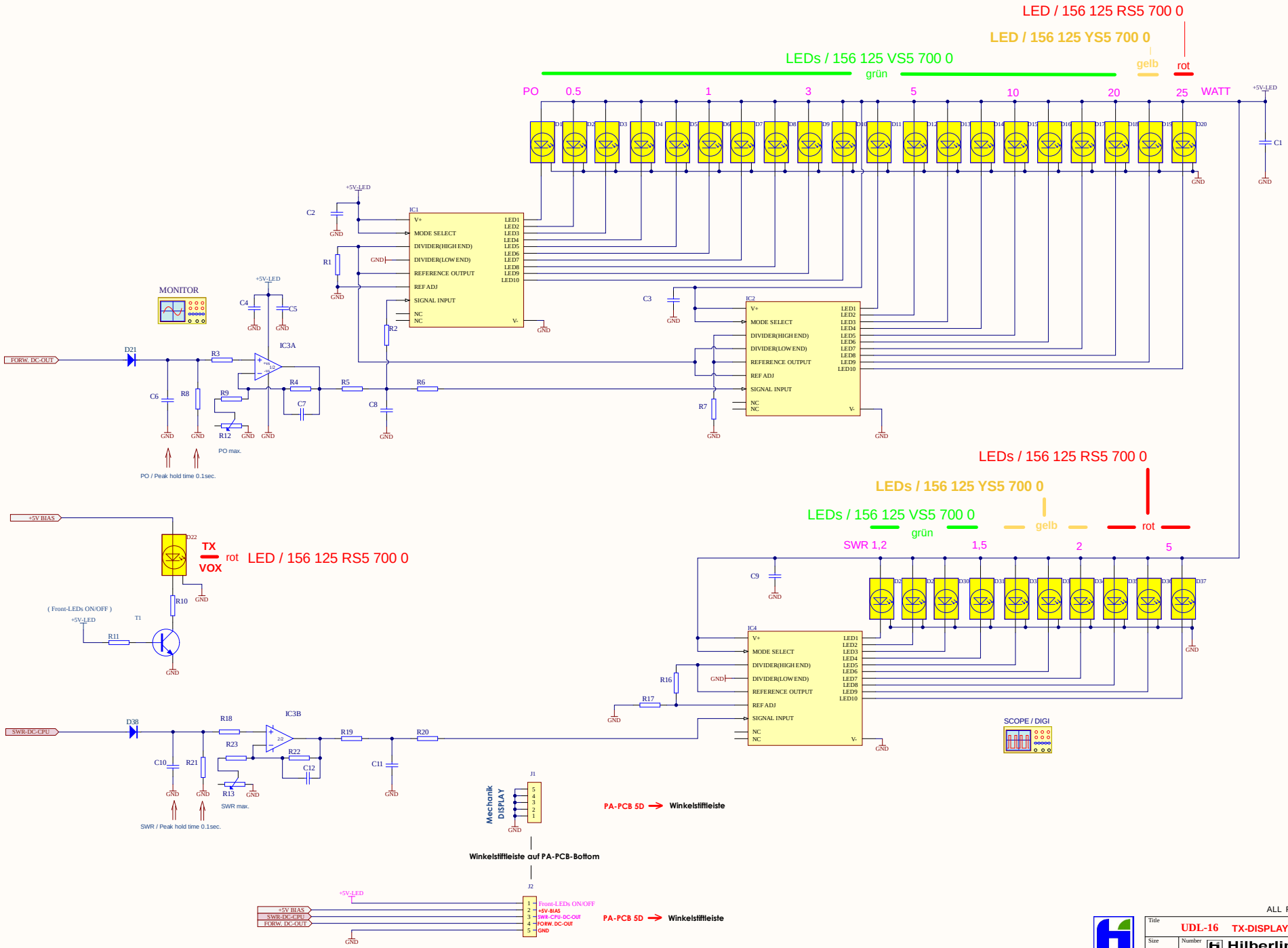
LED / 156 125 RS5 700 0
LED / 156 125 YS5 700 0
LEDs / 156 125 VS5 700 0
grün
gelb
rot
PO
0.5
1
3
5
10
20
25
WATT
+5V-LED
C1
GND
IC1
IC2
IC3A
IC3B
IC4
V+
MODE SELECT
DIVIDER(HIGH END)
DIVIDER(LOW END)
REFERENCE OUTPUT
REF ADJ
SIGNAL INPUT
NC
V-
LED1
LED2
LED3
LED4
LED5
LED6
LED7
LED8
LED9
LED10
MONITOR
FORW. DC-OUT
D21
R3
R4
R5
R6
R7
R8
R9
R12
C2
C3
C4
C5
C6
C7
C8
PO max.
PO / Peak hold time 0.1sec.
LEDs / 156 125 RS5 700 0
LEDs / 156 125 YS5 700 0
LEDs / 156 125 VS5 700 0
grün
gelb
rot
SWR 1,2
1,5
2
5
C9
+5V BIAS
D22
TX
VOX
rot
LED / 156 125 RS5 700 0
R10
(Front-LEDs ON/OFF)
T1
R11
SCOPE / DIGI
SWR-DC-CPU
D38
R18
R23
R22
R19
R20
R16
R17
C10
R21
R13
C12
C11
SWR max.
SWR / Peak hold time 0.1sec.
J1
Mechanik DISPLAY
PA-PCB 5D → Winkelstiftleiste
Winkelstiftleiste auf PA-PCB-Bottom
J2
Front-LEDs ON/OFF
+5V-BIAS
SWR-CPU-DC-OUT
FORW. DC-OUT
GND
PA-PCB 5D → Winkelstiftleiste
ALL RIGHTS RESERVED
Title
UDL-16 TX-DISPLAY 5D
Size
A2
Number
Hilberling
Revision 5.0
06.01.2022 Hilb.
Date: 7.12.2022
Sheet 1 of 1
File: Projekt UDL-16 TX-DISPLAY Hilb.